DRAWING NO		REV.	A0

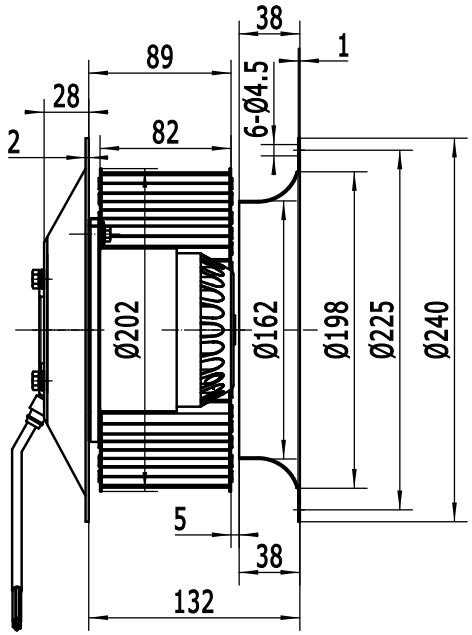

Rotation Direction

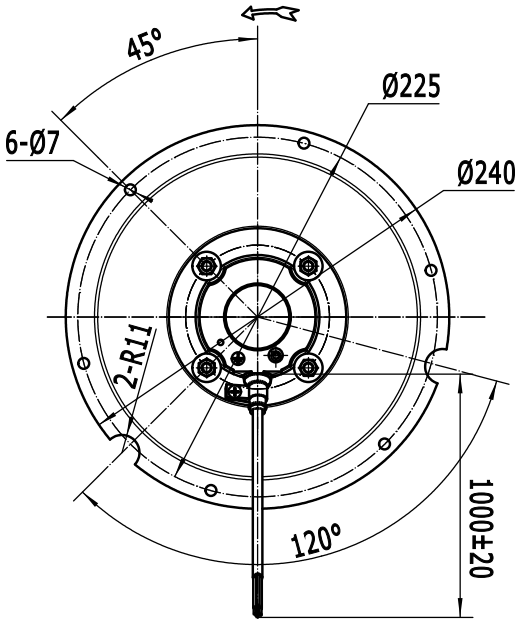

External Rotor Motor

Hangzhou Weiguang Electronic Co.,Ltd.						
Unit: External Rotor Motor				Type:		
Motor: single phase motor with capacitor				Customer:		
Motor type: LXFF4E200/80-M102/47-AA02				Customer-type:		
Voltage V	Frequency Hz	Input power W	Current A	Speed r/min	Capacitor μF/ V_{AC}	Remarks 0Pa
230	50	320	1.4	1340	8	With Housing

Insulation class : F	Operating type: S_1
Permissible ambient temperature : -30℃~60℃	Temperature increase:
Motor protection:thermocontact 150±5℃	Bearings: ball bearings

Model meanings:

LXFF4E 200/80 M102/ 47- AA02

- Centrifugal Fan
- Forward
- Motor poles
- Single Phase
- The diameter of the imperller
- The thickness of impeller
- Metal
- The diameter of the rotor
- The thickness of laminated core
- Item

Electrical connection:lead wire Silikon 4*0.5mm², Length 1000±20mm

LABEL:

WEIGUANG® LXFF4E200/80-M102/47-AA02
230V 50Hz 1.4A 320W 1340r/min 8uF/450V CL.F XX/XX CE

WIRING DIAGRAM

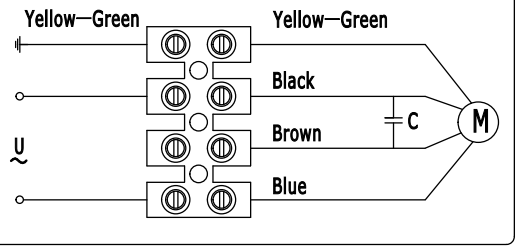

Airflow curves

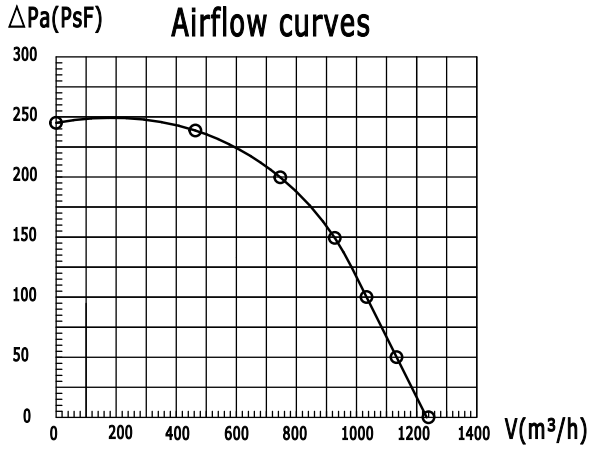

				DECIMAL	TOLERANCE		SIGN	DATE	TITLE	
				X	±0.5	DRN.BY	chunboliu	03/01-22	LXFF4E200/80-M102/47-AA02	
				X.X	±0.25	CHD.BY				
				X.XX	±0.15	ENG.BY			PROJECTION	A4
REV.	DESCRIPTION	APPROVED	DATE	ANGLE	±3°	APP.BY				SCALE
										SHEET: 1 of 1