DRAWING NO		REV.	

External Rotor Motor

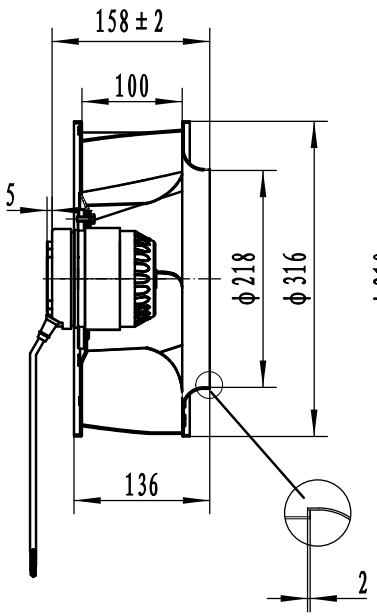

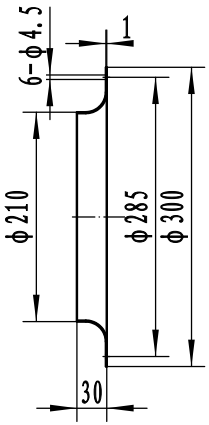

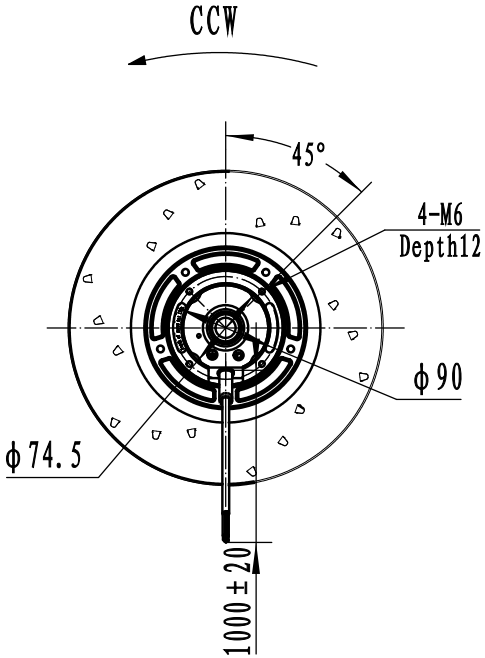

Hangzhou Weiguang Electronic Co.,Ltd.	
Unit: External Rotor Motor	Type:
Type: LXFB4D315/100-M102/34-AB01	Customer:

Voltage V	Frequency Hz	Input power W	Current A	Speed r/min +/-5%	Notice		
380	50	120	0.30	1390			

Insulation class : F	Operating type: S_1
Permissible ambient temperature : -30℃~+60℃	Temperature increase: ΔT≤92k
Bearings: ball bearings	

Model meanings:

LXFB4D315/100-M102/34-AB01

- Centrifugal Fan
- Backward
- Motor poles
- Three Phase
- The diameter of the imperller
- The thickness of impeller
- Item
- The thickness of laminated core
- The diameter of the rotor
- The impeller is made of plastic Metal

1、Electrical connection: lead wire , Length 1000mm 。

2、Bearing: 6001ZZ。

WEIGUANG® LXFB4D315/100-M102/34-AB01

380V 50Hz 0.30A 60/120W 1390r/min

CL.F IP44 XX/XX

CE

WIRING DIAGRAM

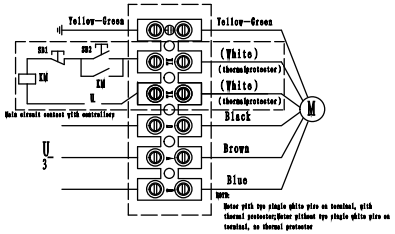

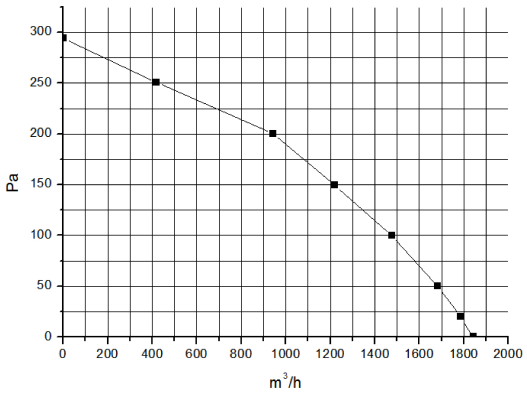

				DECIMAL	TOLERANCE		SIGN	DATE
				X	±0.5	DRN. BY	杨正华	2022-03-01
				X.X	±0.25	CHD. BY		
				X.XX	±0.15	ENG. BY		
REV.	DESCRIPTION	APPROVED	DATE	ANGLE	±3°	APP. BY		

TITLE LXFB4D315/100-M102/34-AB01

PROJECTION

A1

SCALE

SHEET: of